| | | | | | | | | | | |
|---|---|---|---|---|---|---|---|---|---|---|
| MD334894 | 10 (0.394) | *1 | *3 | X | – | X | – | X | – | X |
| MD334895 | 10 (0.394) | *1 | *3 | X | – | X | – | X | – | X |

| | | | | | | | | | | |
|---|---|---|---|---|---|---|---|---|---|---|
| ME201755 | 11 (0.433) | *1 | *3 | X | – | X | – | X | X | X |
| ME201820 | 11 (0.433) | *1 | *3 | X | – | X | – | X | X | X |
| ME201821 | 11 (0.433) | *1 | *3 | X | – | X | – | X | X | X |
| ME201845 | 11 (0.433) | *1 | *3 | X | – | X | – | X | X | X |

| | | | | | | | | | | |
|---|---|---|---|---|---|---|---|---|---|---|
| ME202553 | 11 (0.433) | *1 | *3 | X | – | X | – | X | X | X |
| ME202554 | 11 (0.433) | *1 | *3 | X | – | X | – | X | X | X |

NOTE
X: Applicable
–: Not applicable
*1: Half all speed
*2: All speed
*3: Automatic (wax type)
*4: Manual

| | | | | | | | | | | |
|---|---|---|---|---|---|---|---|---|---|---|
| MD133626 | 9 (0.354) | *1 | *3 | X | X | X | – | X | X | X |
| MD133850 | 9 (0.354) | *1 | *3 | X | X | X | – | X | – | X |
| MD170822 | 9 (0.354) | *1 | *3 | X | X | X | – | X | – | X |
| MD189551 | 10 (0.394) | *1 | *3 | X | X | X | – | X | X | X |
| MD189552 | 10 (0.394) | *1 | *3 | X | X | X | – | X | X | X |
| MD189554 | 10 (0.394) | *1 | *3 | X | X | X | – | X | X | X |
| MD189556 | 10 (0.394) | *1 | *3 | X | X | X | – | X | X | X |
| MD197075 | 10 (0.394) | *1 | *3 | X | X | – | – | X | X | X |
| MD303642 | 10 (0.394) | *1 | *3 | X | X | – | – | X | X | X |
| MD305651 | 10 (0.394) | *1 | *3 | X | X | X | – | X | X | X |
| MD314966 | 10 (0.394) | *1 | *3 | X | X | – | – | X | – | X |
| MD315000 | 10 (0.394) | *1 | *3 | X | X | X | – | X | X | X |
| MD320011 | 10 (0.394) | *1 | *3 | X | X | – | – | X | – | X |
| MD325598 | 10 (0.394) | *1 | *3 | X | X | X | – | X | X | X |
| MD326141 | 10 (0.394) | *1 | *3 | X | X | X | – | X | X | X |

NOTE
X: Applicable
–: Not applicable
*1: Half all speed
*2: All speed
*3: Automatic (wax type)
*4: Manual

| | | | |
|---|---|---|---|
| 0.5 (0.0197) | MD603905 | 0.8 (0.0315) | MD603910 |

NOTE: *Identification mark is stamped on the top surface of the cylinder head.

**Injection nozzle**

Breaking pressure

| | |
|---|---|
| Type A, B, F, G | 12,000 – 13,000 kPa<br>(120 – 130 kg/cm$^2$, 1,707 – 1,849 psi) |
| Type C, D, E | 15,000 – 16,000 kPa<br>(150 – 160 kg/cm$^2$, 2,133 – 2,276 psi) |

| | | | |
|---|---|---|---|
| (4D65, 4D68) | 36 | 3.6 | 26 |
| Injection pump-to-pump bracket bolts (4D56, 4D65) | 24 | 2.4 | 17 |
| Injection pump-to-pump stay bolts (4D68) | 24 | 2.4 | 17 |
| Injection pump stay bolts (4D68) | 19 | 1.9 | 14 |
| Fuel return pipe nuts | 27 | 2.8 | 20 |
| Leak-off pipe nuts | 30 | 3.0 | 22 |
| Injection nozzle | 55 | 5.5 | 40 |
| Retaining nut to nozzle body (4D56, 4D65, 4D68) | 38 | 3.8 | 27 |
| (4M40) | 40 | 4.0 | 29 |

| | | | |
|---|---|---|---|
| 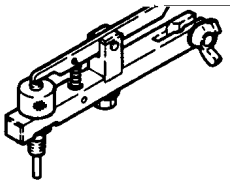 | | adapter | (4D65 and 4D68 with turbocharger) |
| 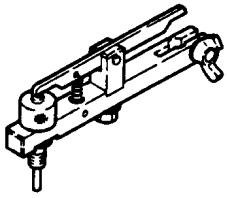 | MD998720 | Prestroke measuring adapter | Adjustment of injection timing (4D65 and 4D68 without turbocharger) |

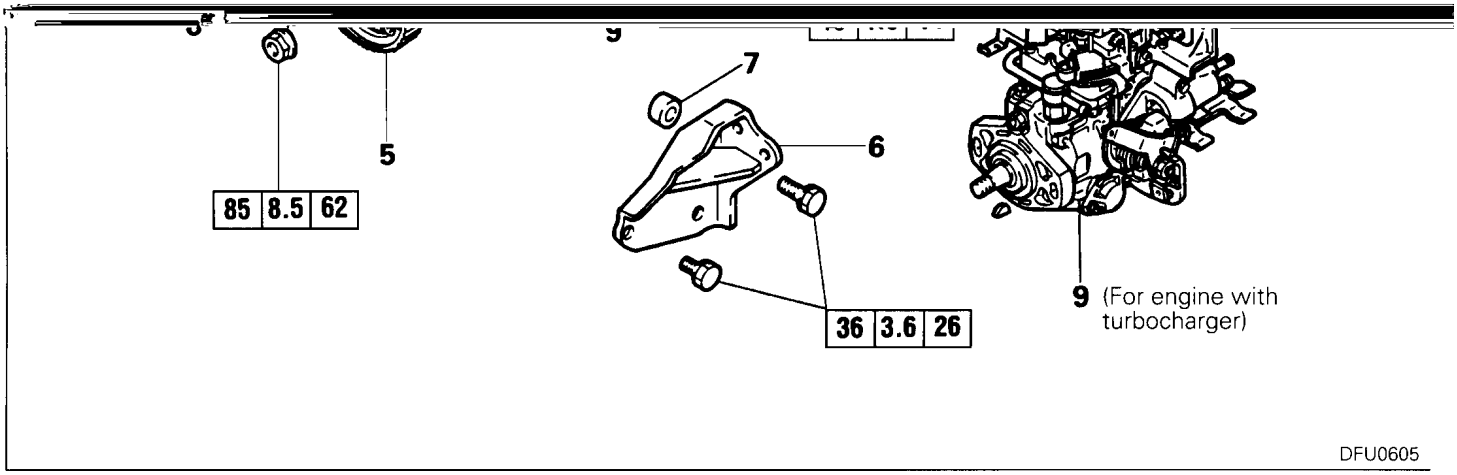
5
85 8.5 62
7
6
36 3.6 26
9 (For engine with turbocharger)
DFU0605

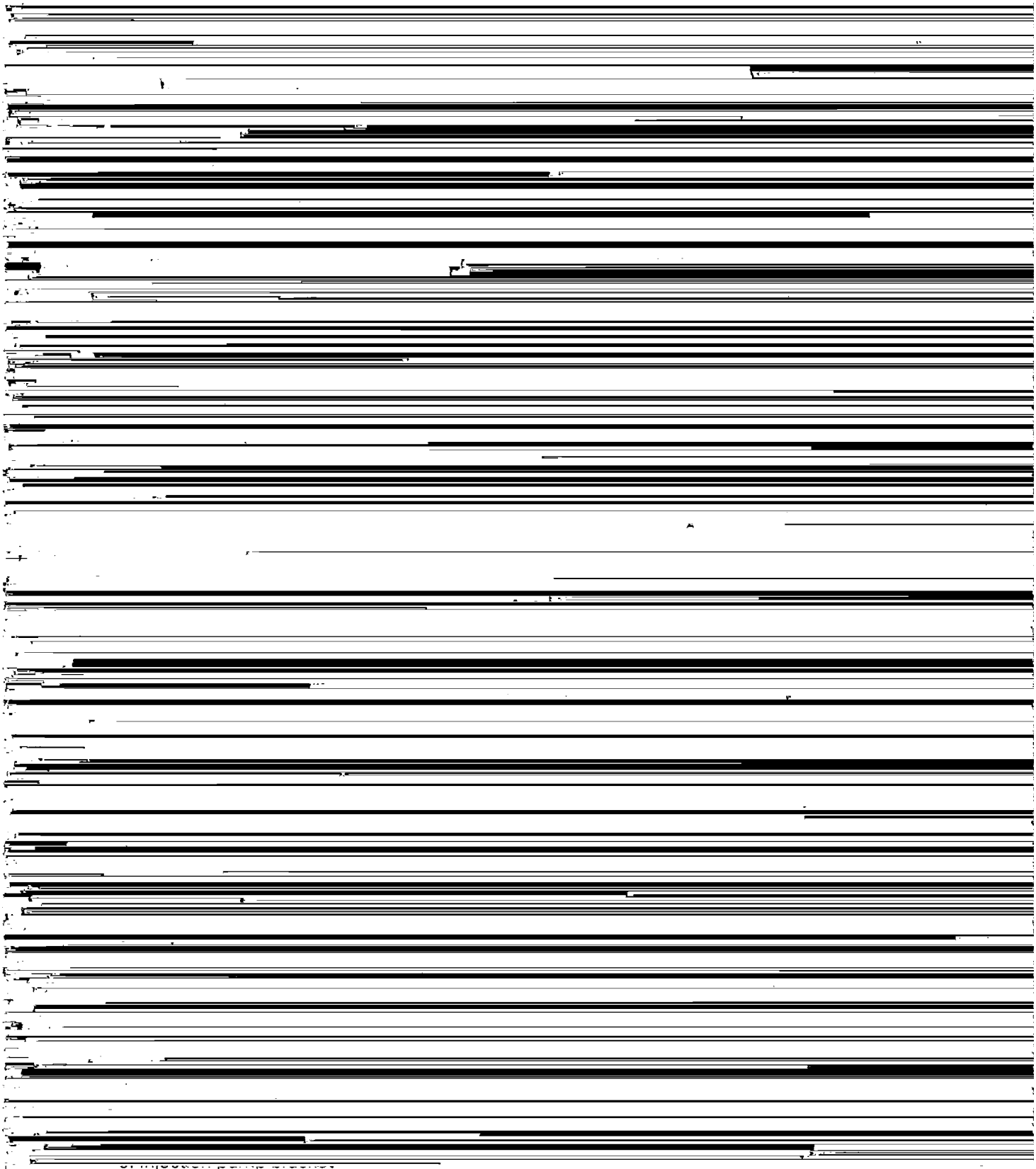

7. Not assigned
8. Injection pump harness assembly
◇C◇ 9. Fuel injection pump
10. Tube (for engine with turbocharger)
11. Not assigned
12. Not assigned
◇D◇ ▶C◀ 13. Fuel return pipe nut
14. Fuel return pipe
15. Gasket
◇E◇ ▶B◀ 16. Injection nozzle
▶A◀ 17. Holder gasket
▶A◀ 18. Nozzle gasket

DFU0001

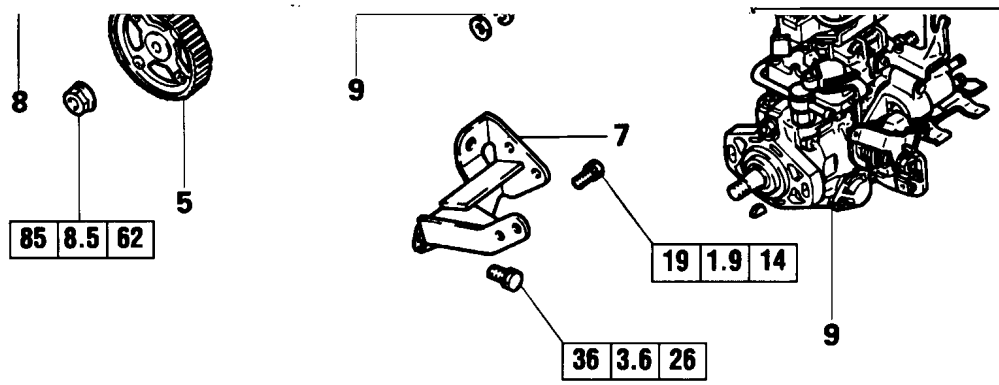


DFU0631

DEN0881

## ◊C◊ REMOVAL OF FUEL INJECTION PUMP

(1) Do not hold the injection pump by the accelerator lever or the fast idle lever. These levers must not be removed.

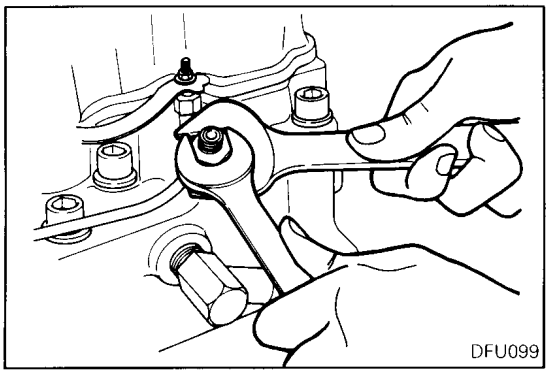


## ◊D◊ REMOVAL OF FUEL RETURN PIPE NUT

(1) When removing the fuel return pipe nut, hold the hexagon nut of fuel return pipe with a spanner.

© Mitsubishi Motors Corporation Oct. 1990

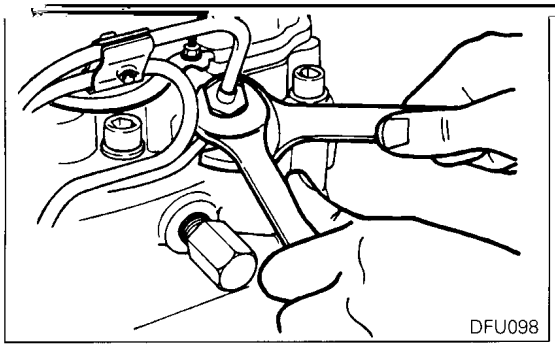


nut of return pipe with a spanner in order to prevent it from rotating along with the nut.

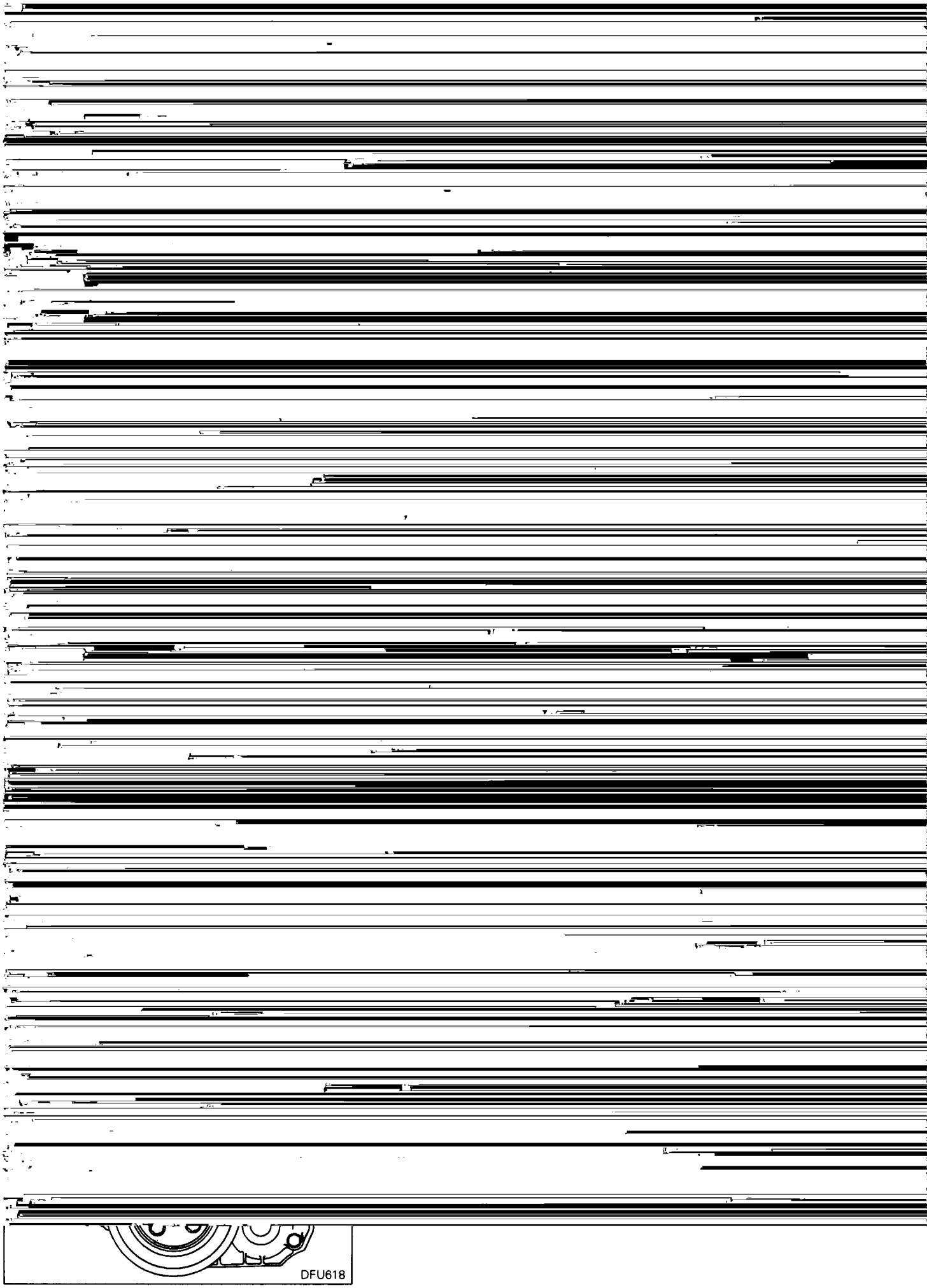
DFU618

Screwdriver [shaft dia.: 8 mm (0.3 in.)]

DEN0210

(0.4 in.)] between the wax rod and the adjusting screw.

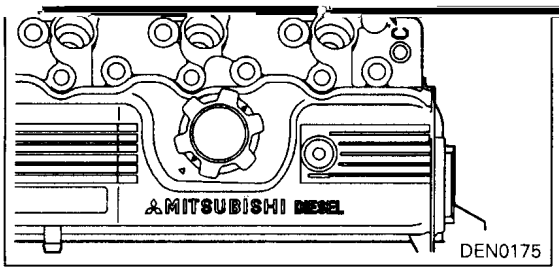


| Identification mark | Injection timing |
|---|---|
| A or B | 7° ATDC |
| C or D | 9° ATDC |

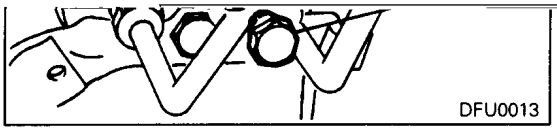
DFU0013

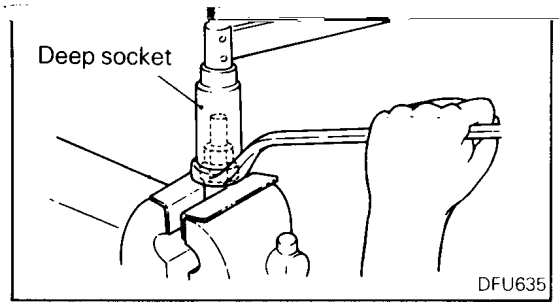


(1) Lightly clamp the retaining nut in a vise with soft jaws.
(2) Hold the retaining nut with a box wrench, and loosen the nozzle holder body using a deep socket.

socket.

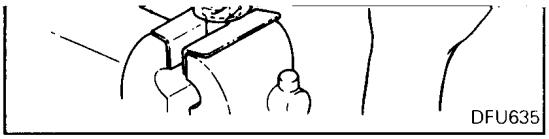

3. Fuel leak-off hose
4. Fuel return hose
5. Fuel feed hose
6. Accelerator cable
7. Throttle cable
8. Boost hose <Turbo>
9. Water hose <with W-CSD>
10. Water hose <with W-CSD>
〈A〉 ◗C◖ 11. Fuel injection pipe
12. Bolt
13. Stay
◗B◖ 14. Fuel injection pump assembly
◗A◖ 15. O-ring

NOTE
W-CSD: Wax type cold start device

04274

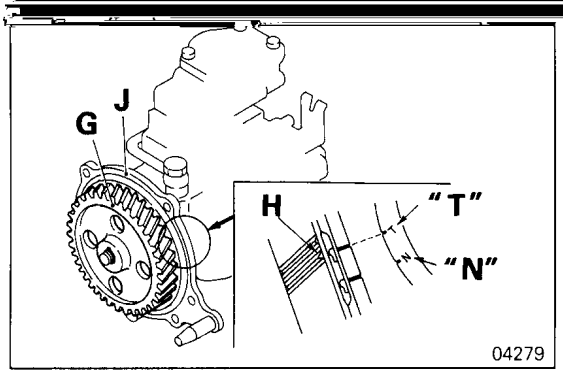


match marking "**N**" <Non-turbo> or "**T**" <turbo> on the flange plate **J**.

When loosening the nuts, hold the delivery valve holder with a wrench to prevent it from turning along with the nut.

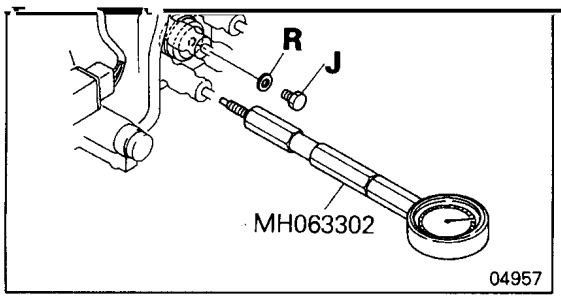


**T = 17 Nm (1.7 kgm, 12 ft.lbs.)**

[redacted]

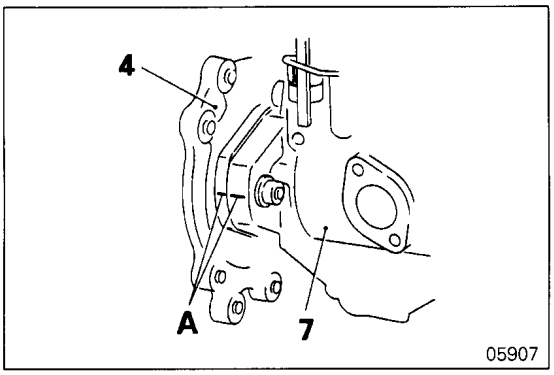


## ◗B◖ FLANGE PLATE INSTALLATION

(1) When installing flange plate **4**, align its alignment mark with alignment mark **A** of injection pump assembly **7**.

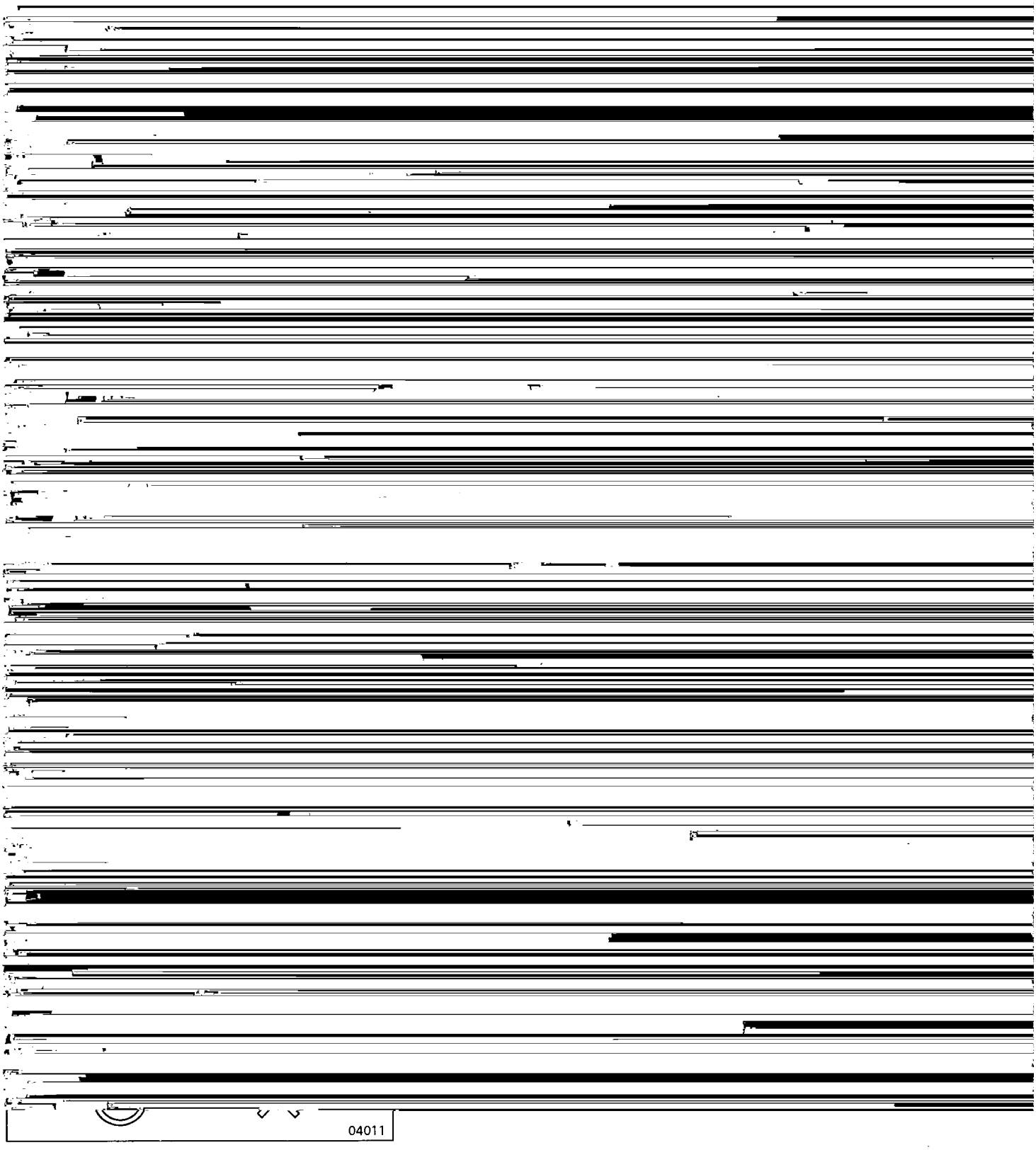


## REMOVAL SERVICE POINTS

### ◊A◊ FUEL INJECTION NOZZLE ASSEMBLY REMOVAL

**Caution**

- **Remove deposited carbon from the fuel injection nozzle assembly 5 before disassembling, reassembling and adjusting it. Prior to disassembly, check the fuel injection nozzle for abnormal injection pressure, abnormal spray and fuel leaks. If it is found in order, do not disassemble the fuel injection nozzle assembly.**

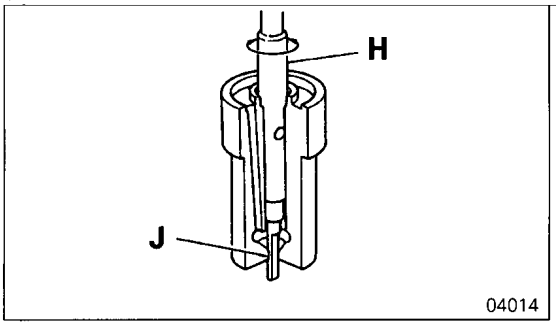


Nozzle tip **14** by turning the special tool Needle Cleaner **H** that runs through the nozzle hole **J**.

**Cleaning needle diameter: Less than 1.0 mm (0.04 in.)**

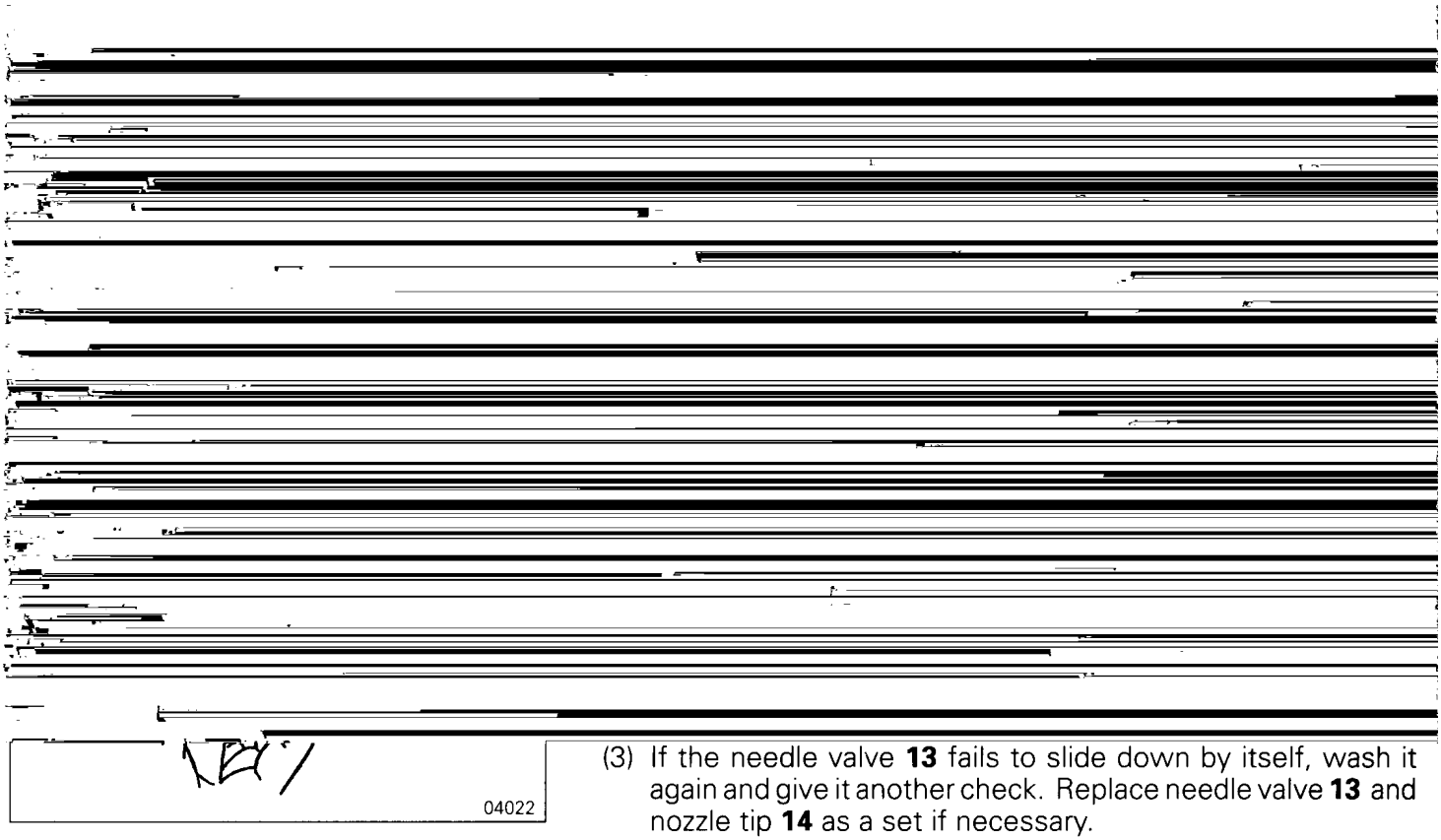




(3) If the needle valve **13** fails to slide down by itself, wash it again and give it another check. Replace needle valve **13** and nozzle tip **14** as a set if necessary.